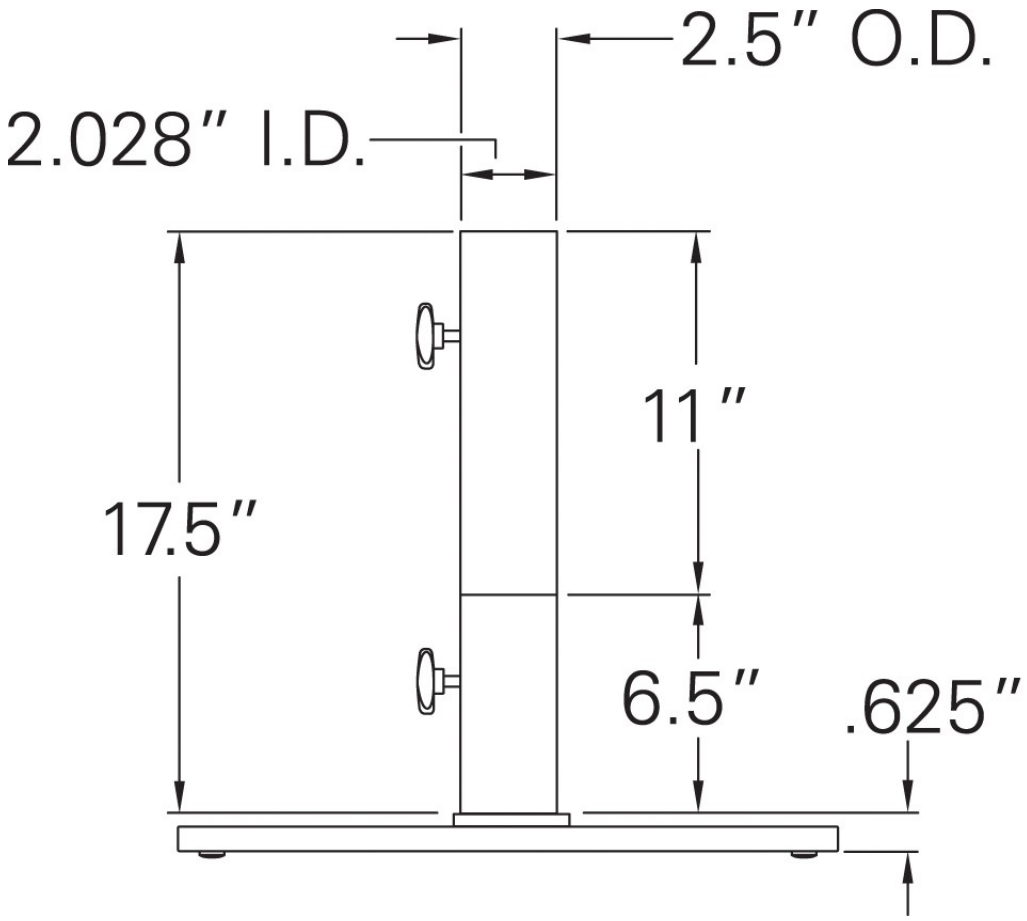
2.5″ O.D.
2.028″ I.D.
11″
17.5″
6.5″
.625″

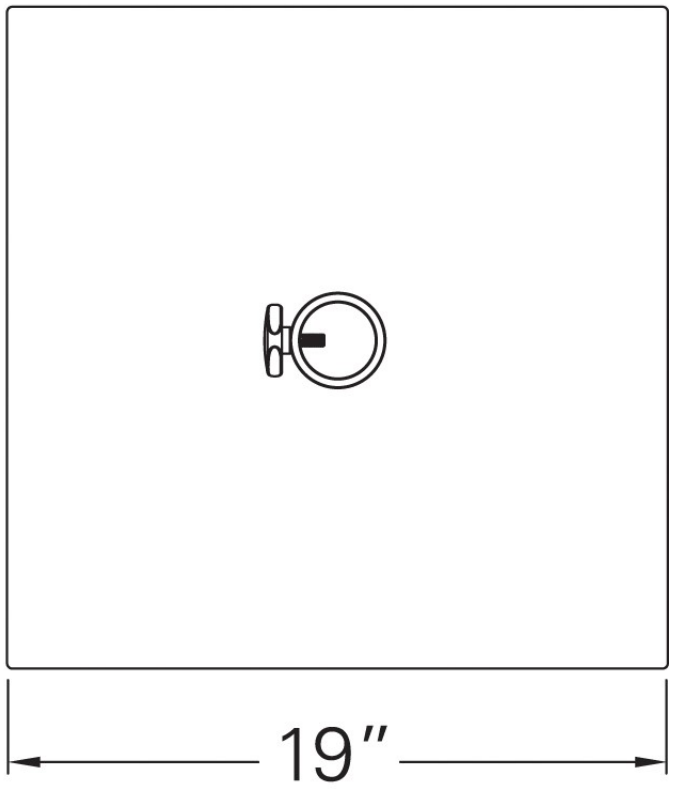
19″